Specification for Approval

Product Name: 240 W Outdoor Programmable Driver

Product Model: XCP-240M062 ☑

XCP-240V062 ☐

Rev. E.2

Sample Date: _____

CUSTOMER AUTHORIZED SIGNATURE		
Tested By	**Checked By**	**Approved By**
(Company seal)Return one copy to MOSO with approved signature and company seal.		

Address: XiLi Songbai Road 1061, Nanshan District, Shenzhen City, Guangdong Province, P.R.China

Post Code: 518108

TEL: 0755-27657000

FAX: 0755-27657908

E-mail: info@mosopower.com

Web site: http://www.mosopower.com

Prepared By	Checked By	Approved By

Product Specification

Product Name: 240 W Outdoor Programmable Driver

Product Model: XCP-240M062 ☑

XCP-240V062 ☐

Rev. E.2

CUSTOMER AUTHORIZED SIGNATURE		
Tested By	**Checked By**	**Approved By**
(Company seal)Return one copy to MOSO with approved signature and company seal.		

Address: XiLi Songbai Road 1061, Nanshan District, Shenzhen City, Guangdong Province, P.R.China

Post Code: 518108

TEL: 0755-27657000

FAX: 0755-27657908

E-mail: info@mosopower.com

Web site: http://www.mosopower.com

Prepared By	Checked By	Approved By

VERSION HISTORY

Rev..	Description of Change		Changed Date	Notes
	Before	After		
A.1	Original Release—		2020-12-23	
B.2		ECL202104106	2021-04-26	Longfu Zhu
C.2		ECL202104007	2021-06-08	
D.2		ECL202108085	2021-09-03	Jin feng li
E.2		ECL202211010	2022-11-3	Jian Zhou

Product Features:

- Universal input voltage / Full range: 90~305Vac;
- Class II design;
- Constant power design, output current programming adjustable;
- (M types) offline programmable, (V types) output current adjustable by built-in potentiometer;
- 3-in-1 dimmable: 1~10Vdc, PWM, Timer dimming;
- (M types)Constant lumen output;
- Self adapting-midnight dimming;
- Output and Dimming Signal Isolating;
- Surge protection: 5KV line-line;
- Protections: SCP, OVP, OTP;
- IP67 design for indoor and outdoor applications;
  - Suitable for dry / damp / wet locations;
  - 5 years warranty.

Application:

- Suitable for LED roadway lighting, plant lighting, industrial lighting, landscape lighting, etc.

DESCRIPTION

The XCP-240 series is 240W outdoor offline programmable LED driver that operates in constant current with high PF value and universal input voltage range 90~305Vac model. Offline Monitored by dimming cable connected with an USB kit programming device, the fully programmed drivers offer all dimming, constant lumen output options and a wide range of output current in a single driver, which deliver maximum flexibility with customized operating settings and intelligent control options for lighting manufacturers, as one driver can be programmed for many different luminaire designs. XCP provides built-in timer dimming schedules further increasing the energy savings and CO_2 reductions achieved with LED lighting. It also helps clients to improve the management of logistics and stock.The compact metal case and high efficiency enables the driver to operating with high reliability, and extending product lifetime. Overall protection is provided against lightening surge, output over voltage, short circuit, and over temperature, to ensure low failure rate.

MODELS

Model Number [1]	Max Output Power (W)	Output Voltage Range (Vdc)	Full Power Output Voltage Range (Vdc)	Full Power Current Adjustable Range (A) [2]	Default Output Current Setting(A)	Typical Efficiency [3]	PF
XCP-240Y062	240	38-62	42-62	3.88-5.71	5.0	92%	0.97

Notes:

[1]. Y can be M or V. Y=M means dimmable and offline programmable, The adjustable Iout range: 10%-100% Imax; Y=V means non-dimmable and output current adjusted by built-in potentiometer;

[2]. Output current adjustable range with constant power at max output power;

[3]. All specifications are measured at 25℃ ambient temperature, input voltage 230Vac, and the typical value tested by full load, if no specific note.

OPERATING AREA I-V

XCP-240Y062

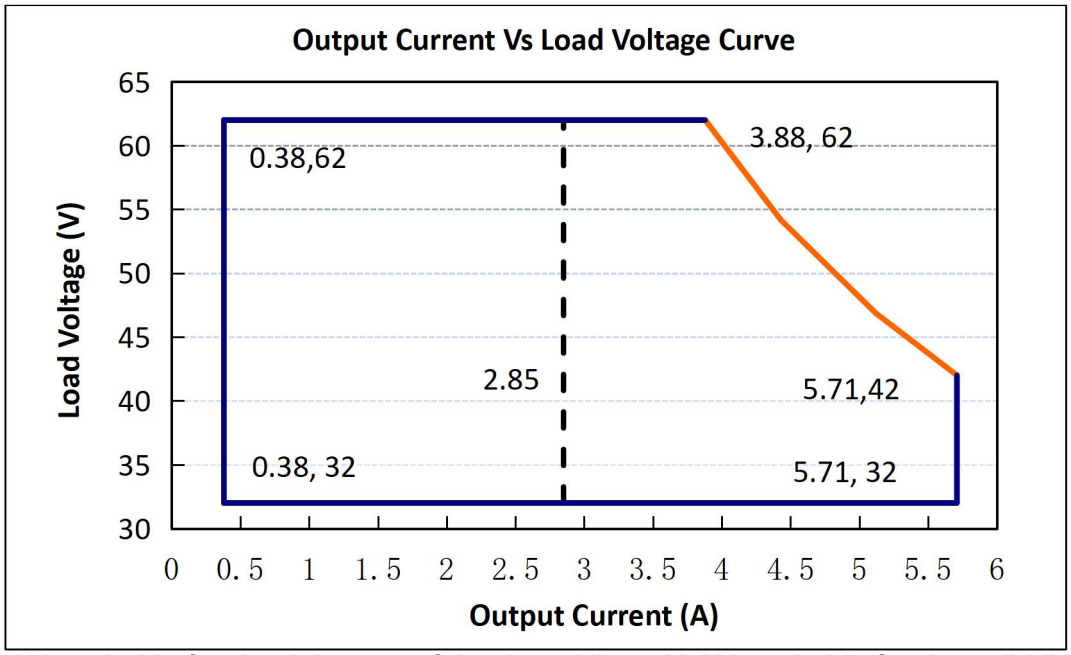

Notes：Y=V is suitable for the right area of the dotted line；Y=M is suitable for the solid line contain area.

INPUT SPECIFICATIONS

Parameter	Min.		Typ.		Max.		Notes
Input Voltage	90Vac		100-277Vac		305Vac		
Input Frequency	47Hz		50/60		63Hz		
Leakage Current	-		-		0.70mA		277Vac/60Hz
Input AC Current	-		-		3.3A		100-277Vac &full load
Inrush Current	-		-		75A		230Vac & full load
Standby Power Consumption					2W		230Vac/50Hz
Power Factor	0.97		0.99		-		115Vac, 50-60Hz,full load
	0.95		0.97				230Vac, 50-60Hz, full load
	0.92		0.95				277Vac, 50-60Hz, full load
THD	-		5%		10%		100-240Vac,50-60Hz, 70%-100% load
	-		-		15%		277Vac, 50-60Hz, 70%-100% load
Max. NO. of PSUs on CIRCUIT BREAKER	B10	1	B16	2	B25	2	230Vac
	C10	2	C16	3	C25	4	

OUTPUT SPECIFICATIONS

Parameter	Min.	Typ.	Max.	Notes
Output Current Tolerance	-5%Iset	-	5%Iset	
Output Current Setting Range (A) XCP-240Y062	2.855	-	5.71	The 'M type' adjustable Iout range: 10%-100% Imax.
Output Current Setting Range with Constant Power XCP-240Y062	3.88	-	5.71	
Total Output Current Ripple(pk-pk)	-	5%	10%	20MHz BW, full load& LED load, the ripple would be tiny different under different LED load.
Startup Overshoot Current	-	-	10%	100~277Vac &100% Load, load is LED
No Load Output Voltage(V) XCP-240Y062	-	-	70	
Line Regulation	-1%	-	1%	25℃±10℃ ambient temperature, input voltage changes from 100Vac to277Vac.
Load Regulation	-3%	-	3%	25℃±10℃ambient temperature, Input Voltage 230Vac, load changes from 60% to 100%.
Turn-on Delay Time	-	1S	2S	115Vac,100% load
	-	-	0.5S	230Vac,100% load

GENERAL SPECIFICATIONS

Parameter		Min.	Typ.	Max.	Notes
Efficiency @115Vac XCP-240Y062 I_O=3.88A I_O=5.71A		88% 88%	90% 90%		Measured at full load and 25℃ambient temperature
Efficiency @230Vac XCP-240Y062 I_O=3.88A I_O=5.71A		91% 91%	92% 92%	-	Measured at full load and 25℃ambient temperature
Efficiency @277Vac XCP-240Y062 I_O=3.88A I_O=5.71A		92% 92%	93% 93%		Measured at full load and 25℃ambient temperature
Dielectric Strength	Input-Output	-	3750Vac	-	Max 5mA/60S
	Input-Case	-	3750Vac	-	
	Output-Case	-	1600Vac	-	
Grounding Resistance		-	-	0.1Ω	25A/60S, under 25℃±10℃ambient temperature
Insulation Resistance		10MΩ	-	-	Input-Output, Input-Case, Output-Case, 500Vdc/60S/25℃/70%RH
MTBF		-	200000Hrs	-	25℃±10℃ambient temperature, 230Vac,80% load (MIL-HDBK-217F)
Lifetime		-	100000Hrs	-	230Vac&100% load, 75℃ case temperature, refer to lifetime curve for

				details
Ambient Temperature	-40℃		+60℃	230Vac&100% load
Operating Case Temperature for Safety Tc_s	-40℃	-	+90℃	
Operating Case Temperature for Warranty Tc_s	-40℃	-	+75℃	5 years warranty case temperature Humidity: 10% to 95% RH
Storage Temperature	-40℃	-	+85℃	Humidity: 5% to 100% RH
Dimensions (L*W*H)mm	L208.6*W68*H39mm			
Net Weight	1050±100g/PCS			
Package	L502mm*W372mm*H222mm; 15PCS/Ctn, Gross Weight:16.2kg			

DIMMING

Parameter		Min.	Typ.	Max.	Notes
1~10V Absolute Maximum Voltage on the Vdim (+) Pin		-	10V	-	
1~10V Source Current on Vdim(+)Pin		-	200uA	400uA	
Dimming Output Range	XCP-240M062	10%Imax	-	100%Imax	I_{max}=5.71A
	XCP-240M062	0.571	-	5.71	
Recommended Dimming Range for 1-10V		1V	-	10V	Default 1-10V/ PWM Dimming(1-10V,1-9V,0-5V,0-3.3V Positive and Reverse Logic can be customized as request)
PWM_in High Level		9.7V	-	10.3V	
PWM_in Low Level		0V	-	0.3V	
PWM_in Frequency Range		300Hz		2KHz	
PWM_in Duty Cycle		1%	-	99%	

SAFETY STANDARDS

Safety Category	Country / Territory	Standards	Approved
CCC	China	GB19510.1, GB19510.14	
CE	Europe	EN61347-1, EN61347-2-13	√
		EN62493	√
ENEC		EN62384	√
CB	CB Countries	IEC61347-1, IEC61347-2-13	√
BIS	India	IS 15885(PART 2/SEC 13)	
UL	USA	UL 8750	
CUL	Canada	CSA C22.2 No.250.13	
KC	South Korea	K61347-1, K61347-2-13	
PSE	Japan	J61347-1, J61347-2-13	
SAA	Australia	AS/NZS IEC 61347.2.13	
		AS/NZS 61347.1	

Insulation

Insulation	Input/Mains	DIMING	LED Output	Case
Input/Mains	/	Double	Double	Double
DIMING	Double	/	Basic	Basic
LED Output	Double	Basic	/	Basic
Case	Double	Basic	Basic	/

EMC COMPLIANCE

EMC Category	Country / Territory	Standards	Approved
CCC	China	GB/T 17743, GB 17625.1	
CE	Europe	EN 55015	√
		EN 61000-3-2, EN 61000-3-3	√
		EN61000-4-2,3,4,5,6,11	√
		EN 61547	√
KC	South Korea	K61547	
		K00015	
PSE	Japan	J55015	
FCC	USA	FCC part 15	

NOTE:

This LED driver meets the EMI specifications above, but as a component of a luminaire, end customer need to identify the EMI performance of a luminaire including LED driver, other devices connected to the driver and on the luminaire itself.

INRUSH CURRENT WAVEFORM

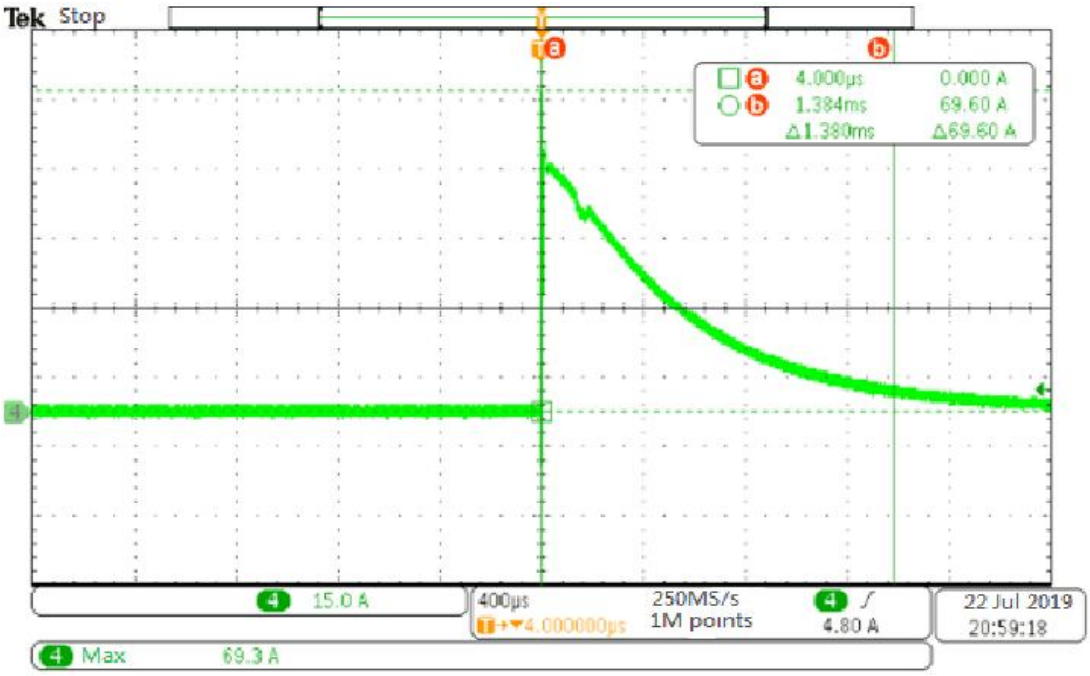

DERATING CURVE

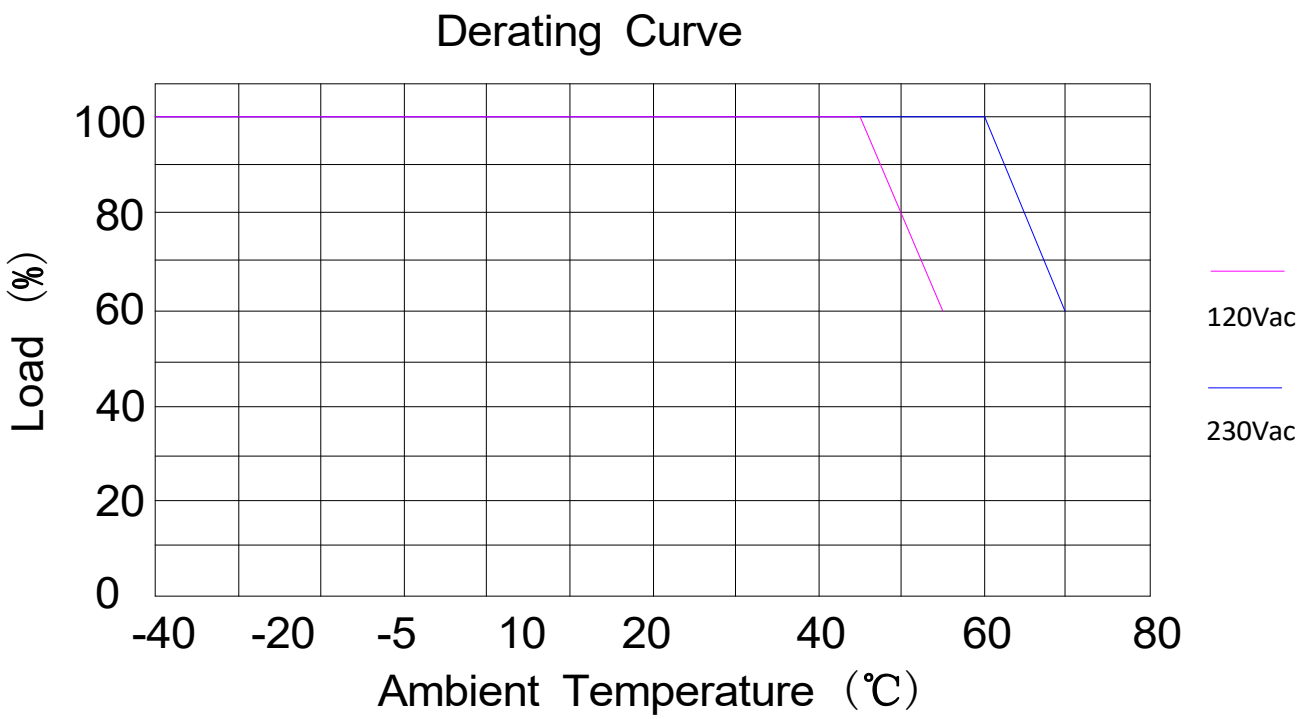

OUTPUT POWER VS INPUT VOLTAGE

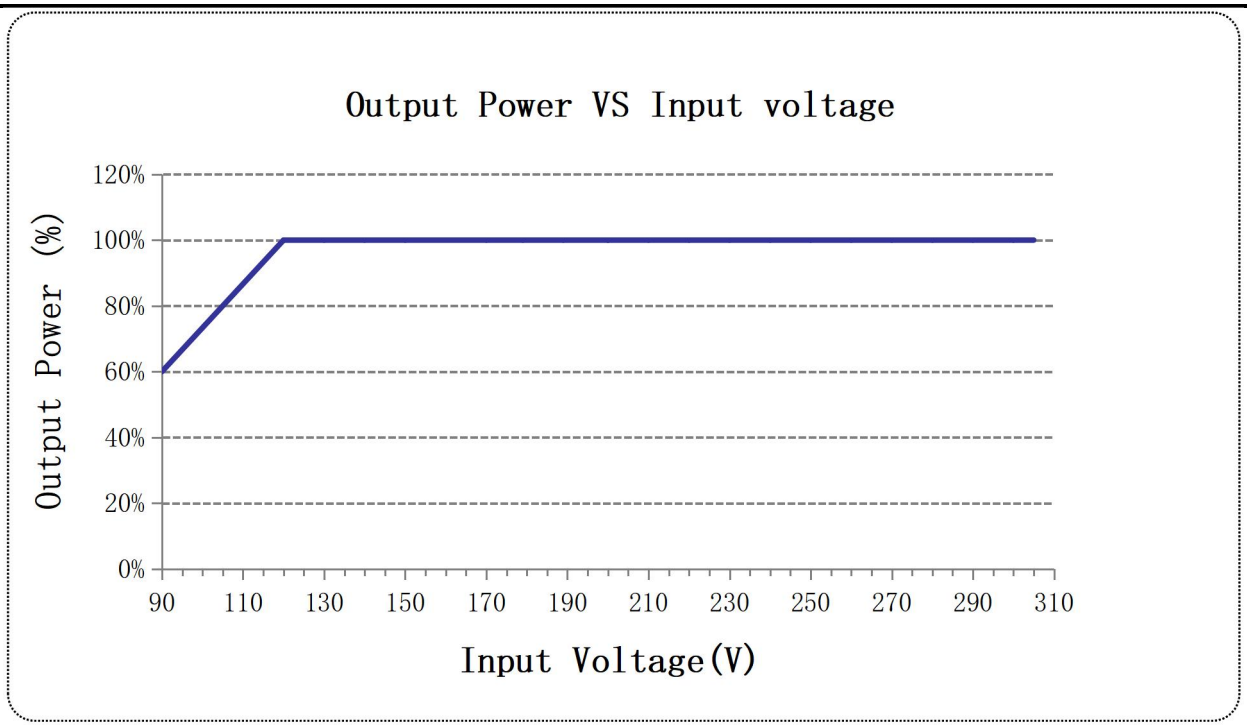

LIFE TIME VS CASE TEMPERATURE

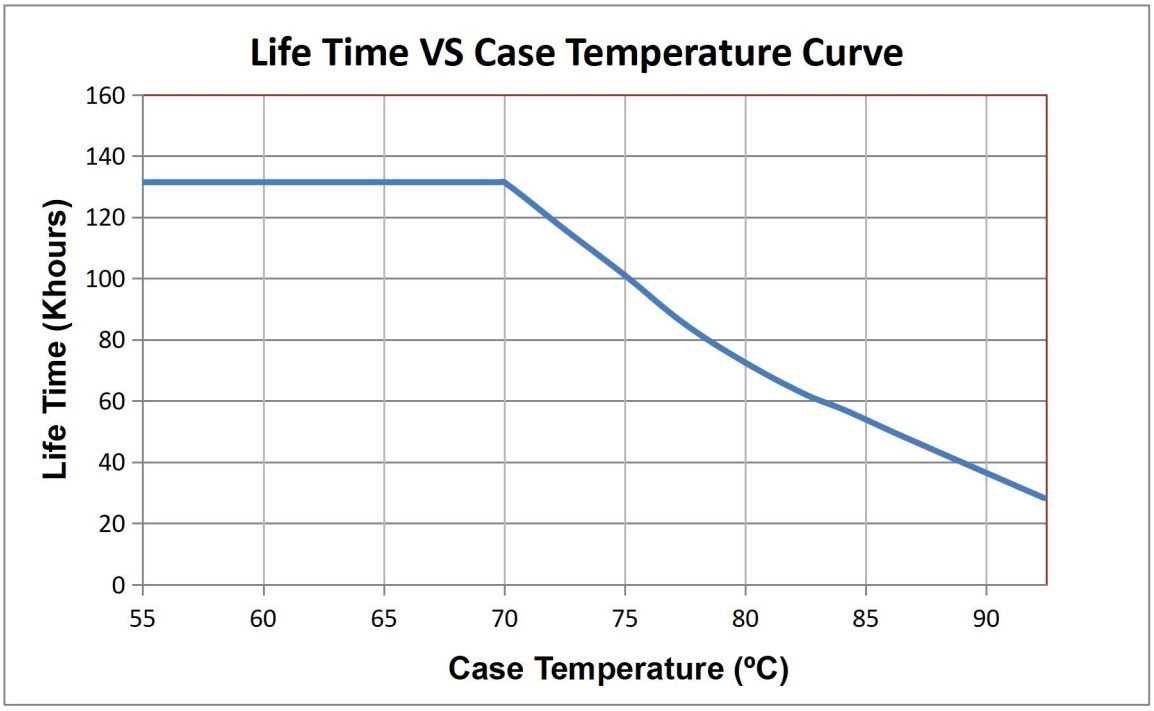

POWER FACTOR VS LOAD

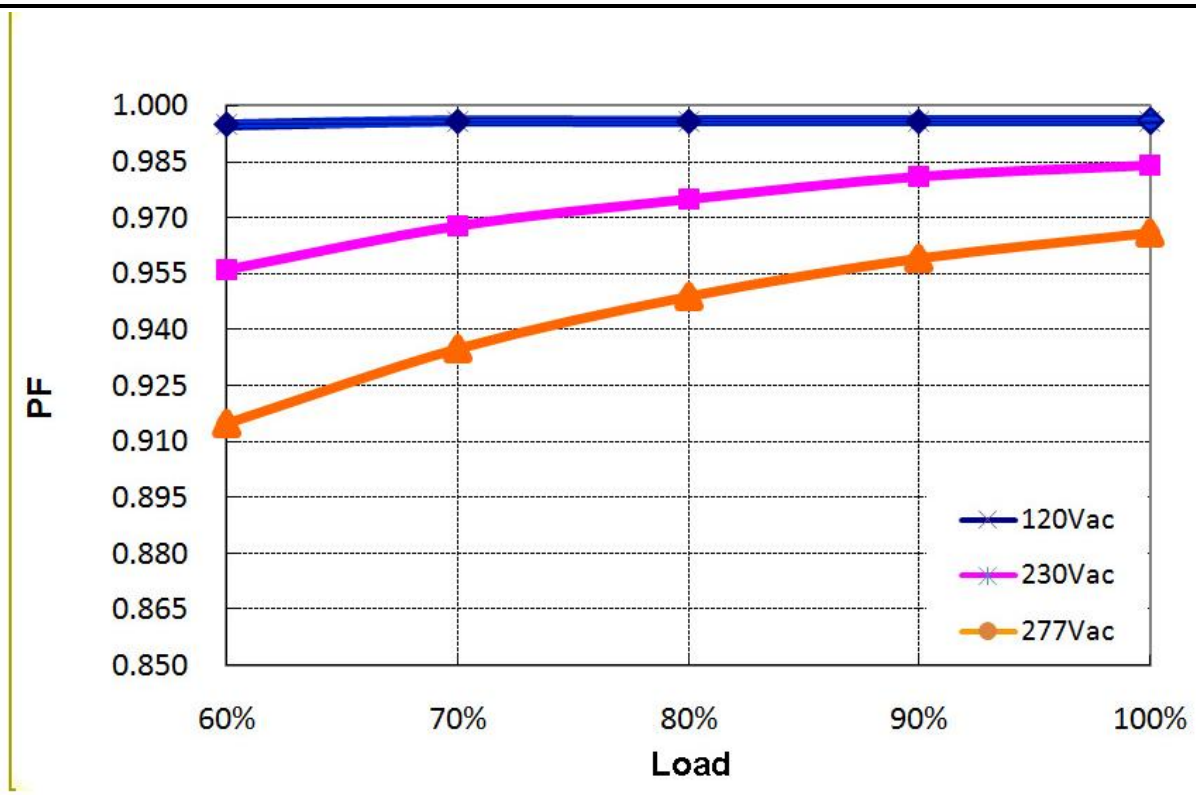

TOTAL HARMONIC DISTORTION

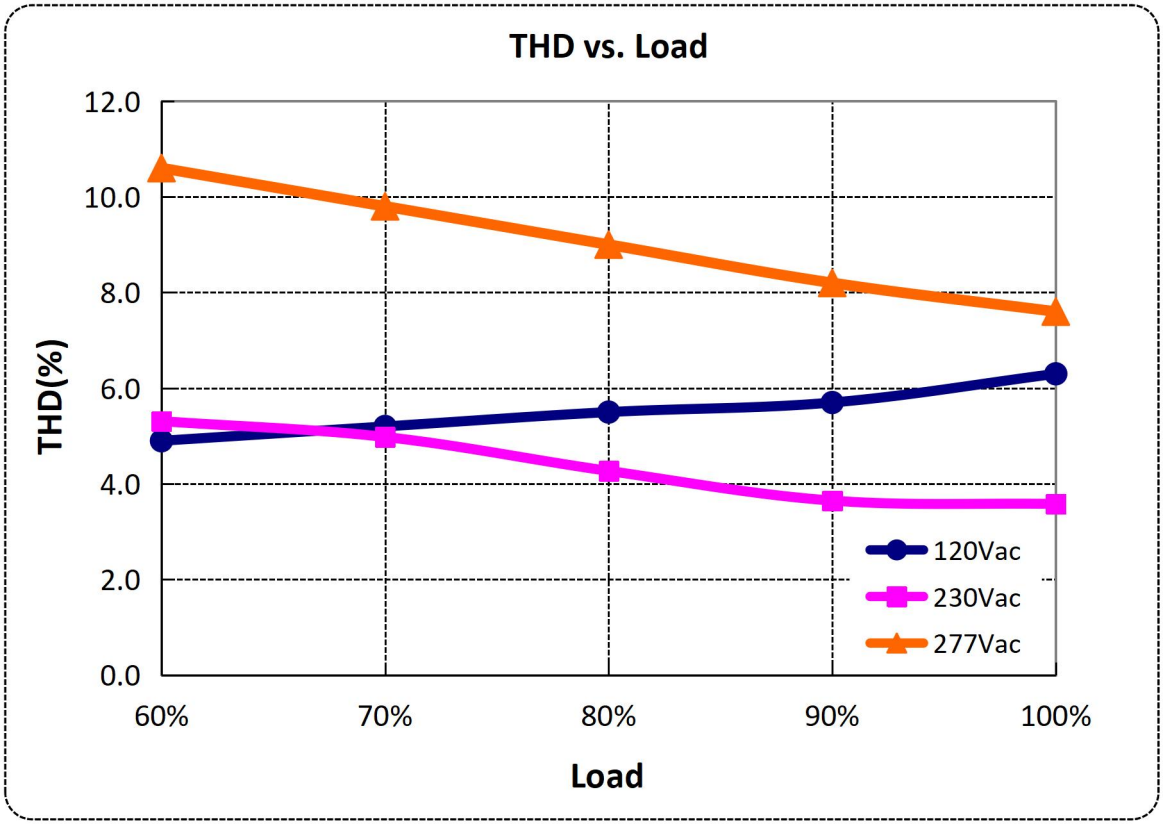

EFFICIENCY VS LOAD

XCP-240M062 (Io=3.88A)

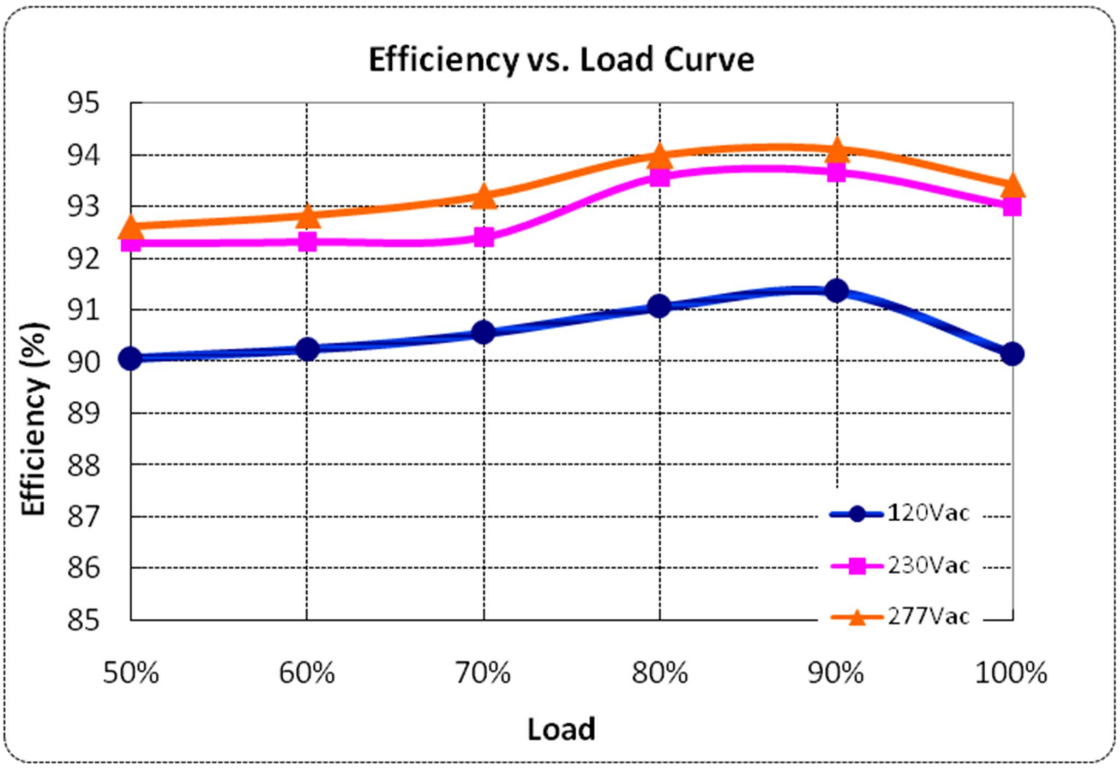

XCP-240M062 (Io=5.71A)

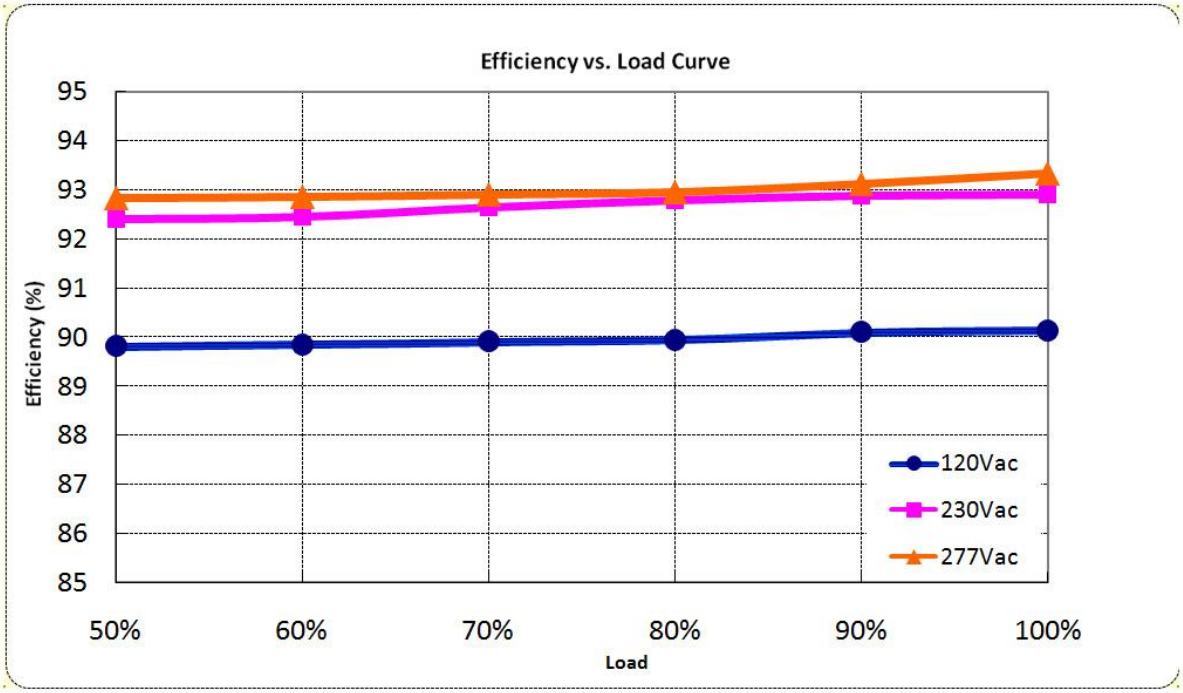

PROTECTIONS

Parameter	Notes
Over Temperature Protection	Decreases output current, returning to normal after over temperature is removed.
Short Circuit Protection	Constant current mode and auto recovery. No damage will occur when any output is short circuited. The output shall return to normal when the fault condition is removed.
Over Voltage Protection	Run into protection model when output voltage exceeds limit, and return to normal when the fault

1-10V/PWM DIMMING

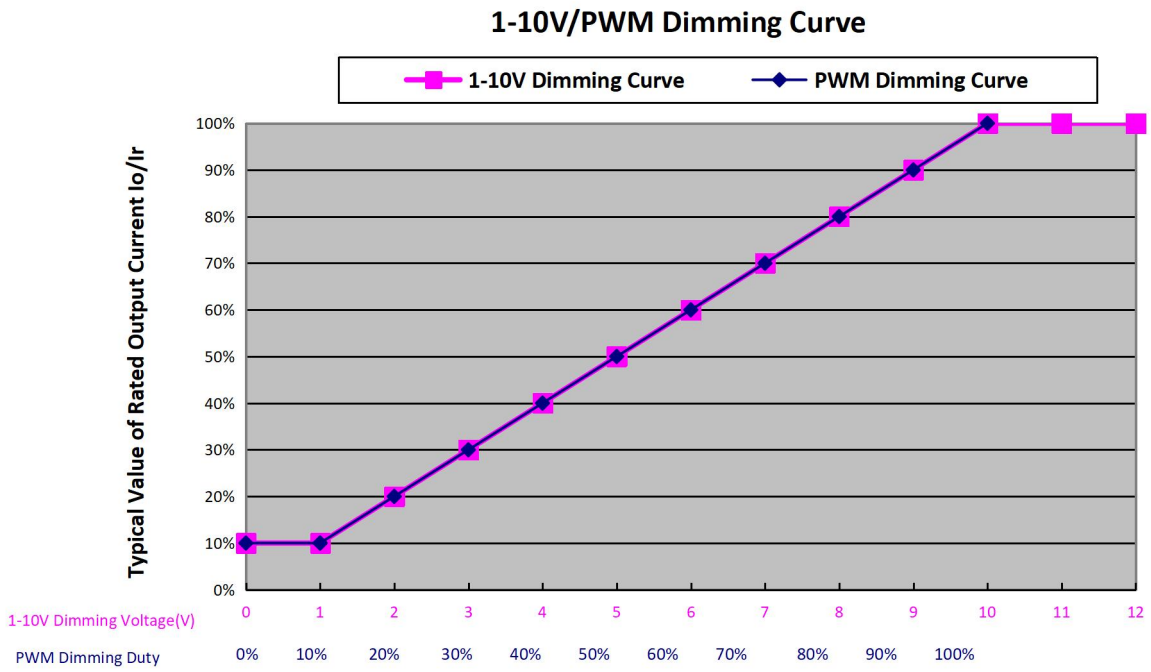

MECHANICAL OUTLINE

XCP-240M062

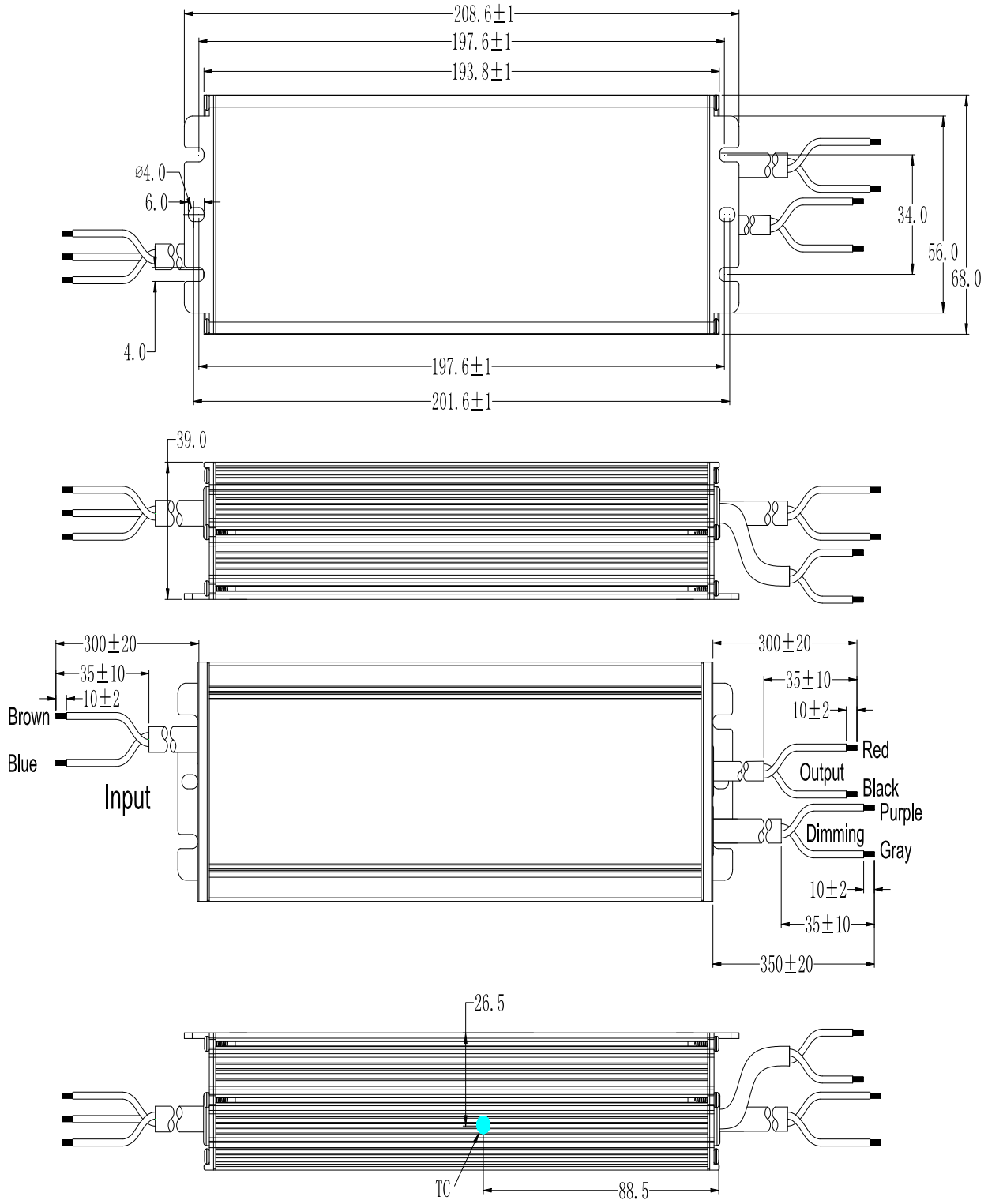
208.6±1
197.6±1
193.8±1
ø4.0
6.0
34.0
56.0
68.0
4.0
197.6±1
201.6±1
39.0
300±20
35±10
10±2
Brown
Blue
Input
300±20
35±10
10±2
Red
Output
Black
Purple
Dimming
Gray
10±2
35±10
350±20
26.5
TC
88.5

XCP-240V062

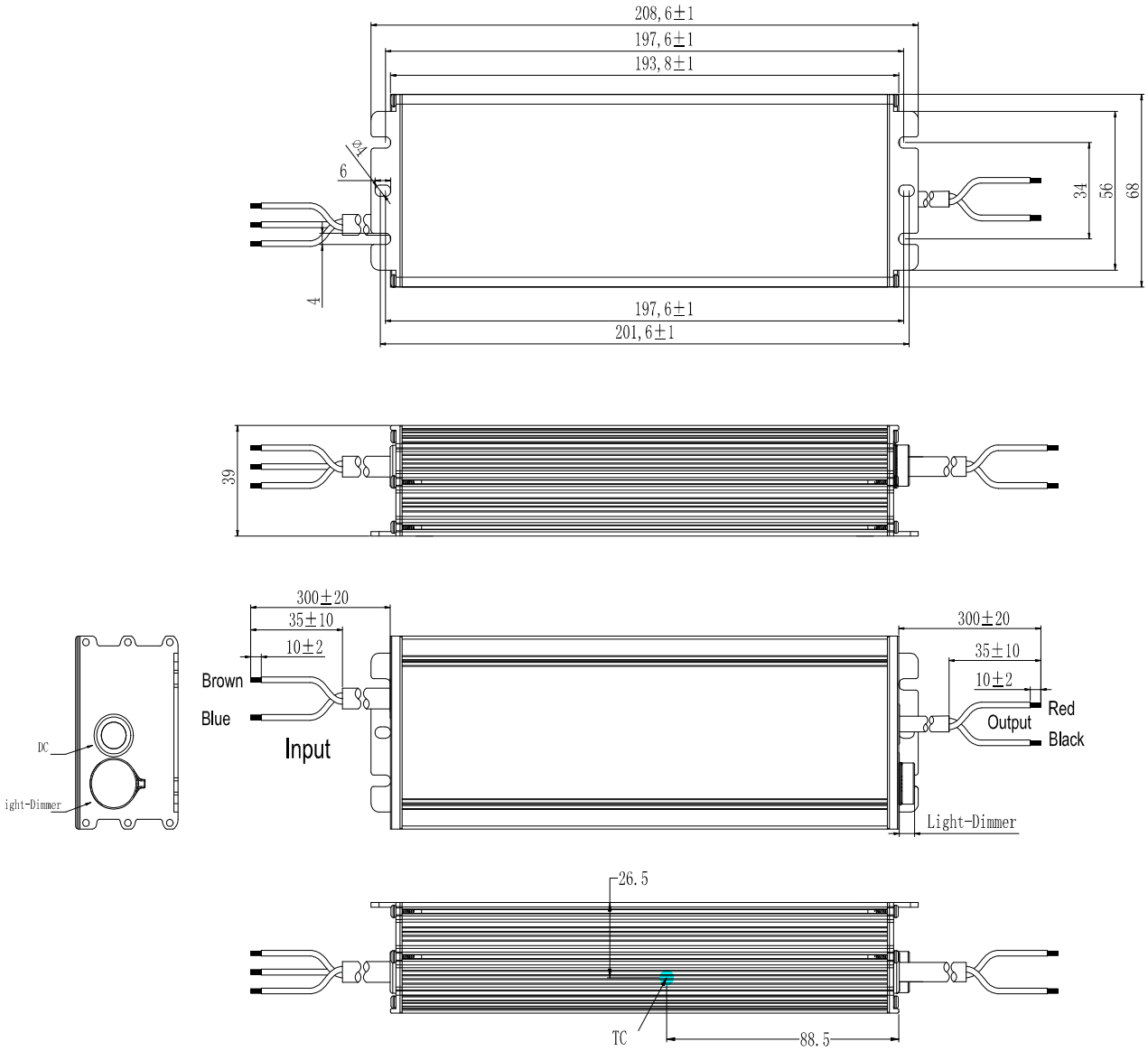

Wire	Specification	Note
Input	3C+VDE 2*1.0mm2 L=300±20mm, peel length 35mm, Tin-dip length 10mm	CE/CCC
Output	UL SJOW 18#2C L=300±20mm, peel length 35mm, Tin-dip length 10mm	UL
Dimming	UL2733 22AWG*2C L=350±20mm, peel length 35mm, Tin-dip 10mm	Y = M

LABEL

XCP-240M062

183.00 mm
45.50 mm
INPUT
MOSO® XCP-240M062
LED DRIVER
L BROWN
N BLUE
INPUT 100-277V～50/60Hz, 3.3A Max.PF:0.95
OUTPUT 38-62V⎓ 0.57-5.71A
Max: 70V⎓
Max.Power:240W
tc: 90℃ ta: 50℃ Input:100-200V～
ta: 60℃ Input:200-277V～
MADE IN CHINA
For LED module only
SHENZHEN MOSO ELECTRONICS TECHNOLOGY CO., LTD
No.1061, Songbai Road, Xili Town, Nanshan District,
Shenzhen, CHINA
SELV
IP67
RoHS
OUTPUT
RED Vo +
BLACK Vo −
PURPLE DIM +
GRAY DIM −

XCP-240V062

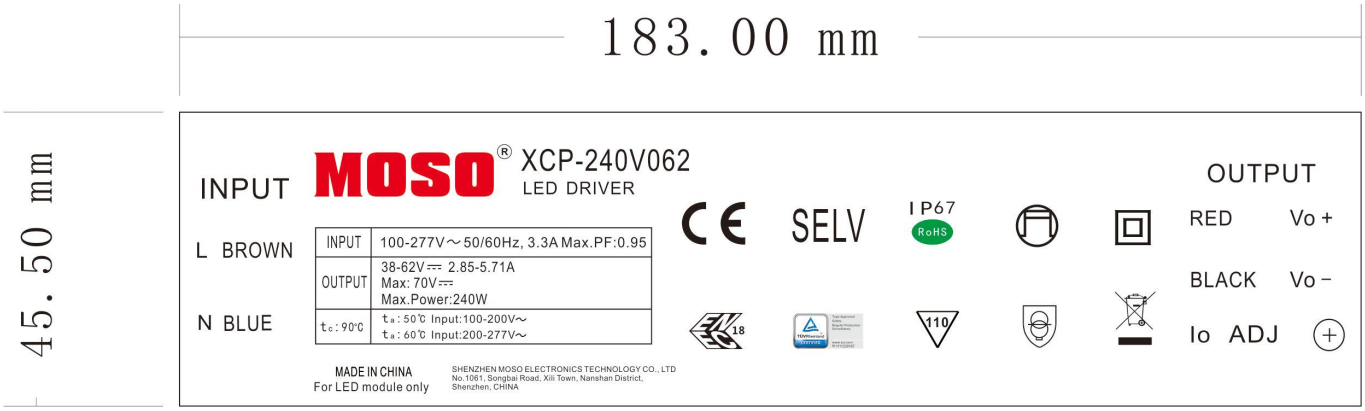
183.00 mm
45.50 mm
INPUT
MOSO® XCP-240V062
LED DRIVER
L BROWN
N BLUE
INPUT 100-277V～50/60Hz, 3.3A Max.PF:0.95
OUTPUT 38-62V⎓ 2.85-5.71A
Max: 70V⎓
Max.Power:240W
tc: 90℃ ta: 50℃ Input:100-200V～
ta: 60℃ Input:200-277V～
MADE IN CHINA
For LED module only
SHENZHEN MOSO ELECTRONICS TECHNOLOGY CO., LTD
No.1061, Songbai Road, Xili Town, Nanshan District,
Shenzhen, CHINA
SELV
IP67
RoHS
OUTPUT
RED Vo +
BLACK Vo −
Io ADJ